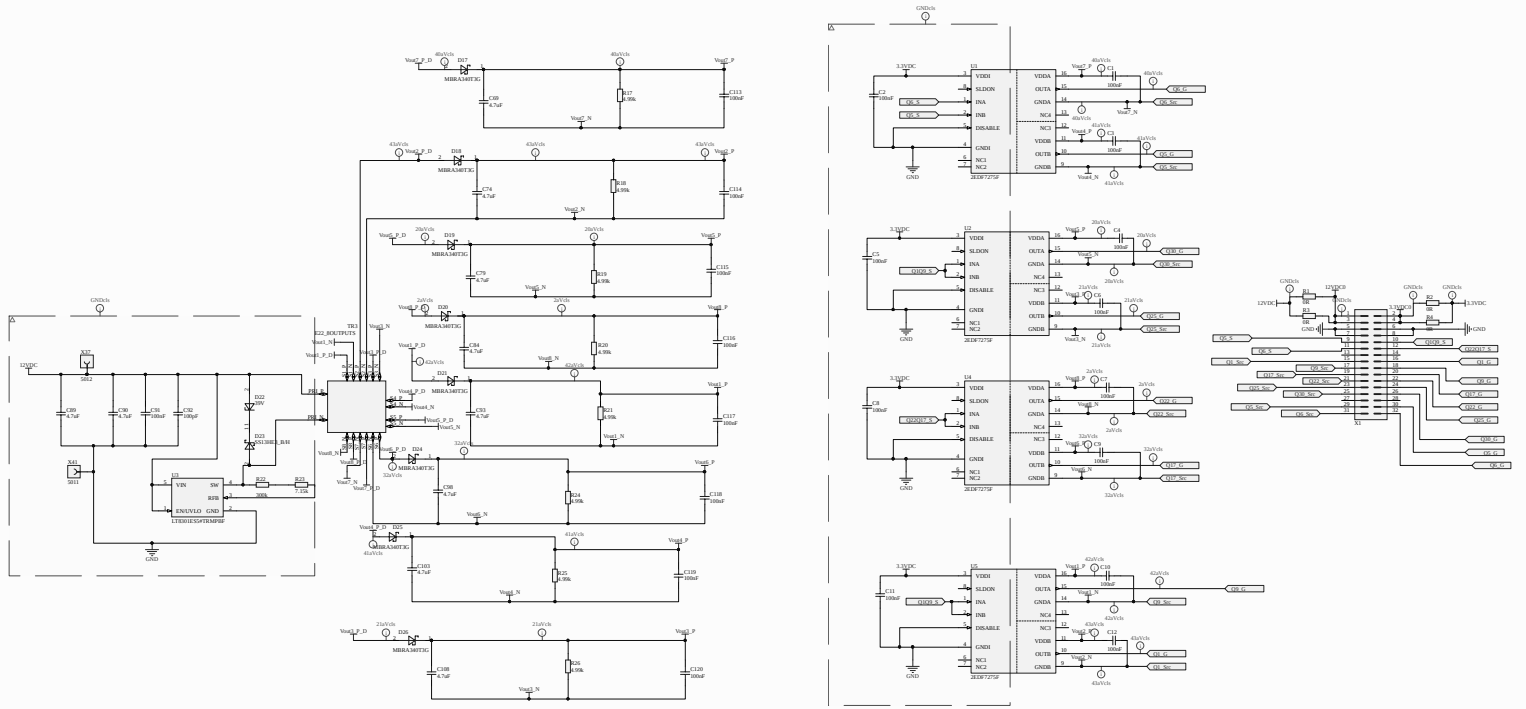

Title *			
Size: D	Number:*	Revision:*	
Date: 3/14/2020	Time: 5:21:19 PM	Sheet* of *	
File: R:\SOLAR\Demo Board\4kVA_48VAC_48VAC_SLINV\Schematic and PCB\Version C1\4kVA_48VAC_SLINV_FINGD_S			

Altium